BLOCK-DIAGRAM

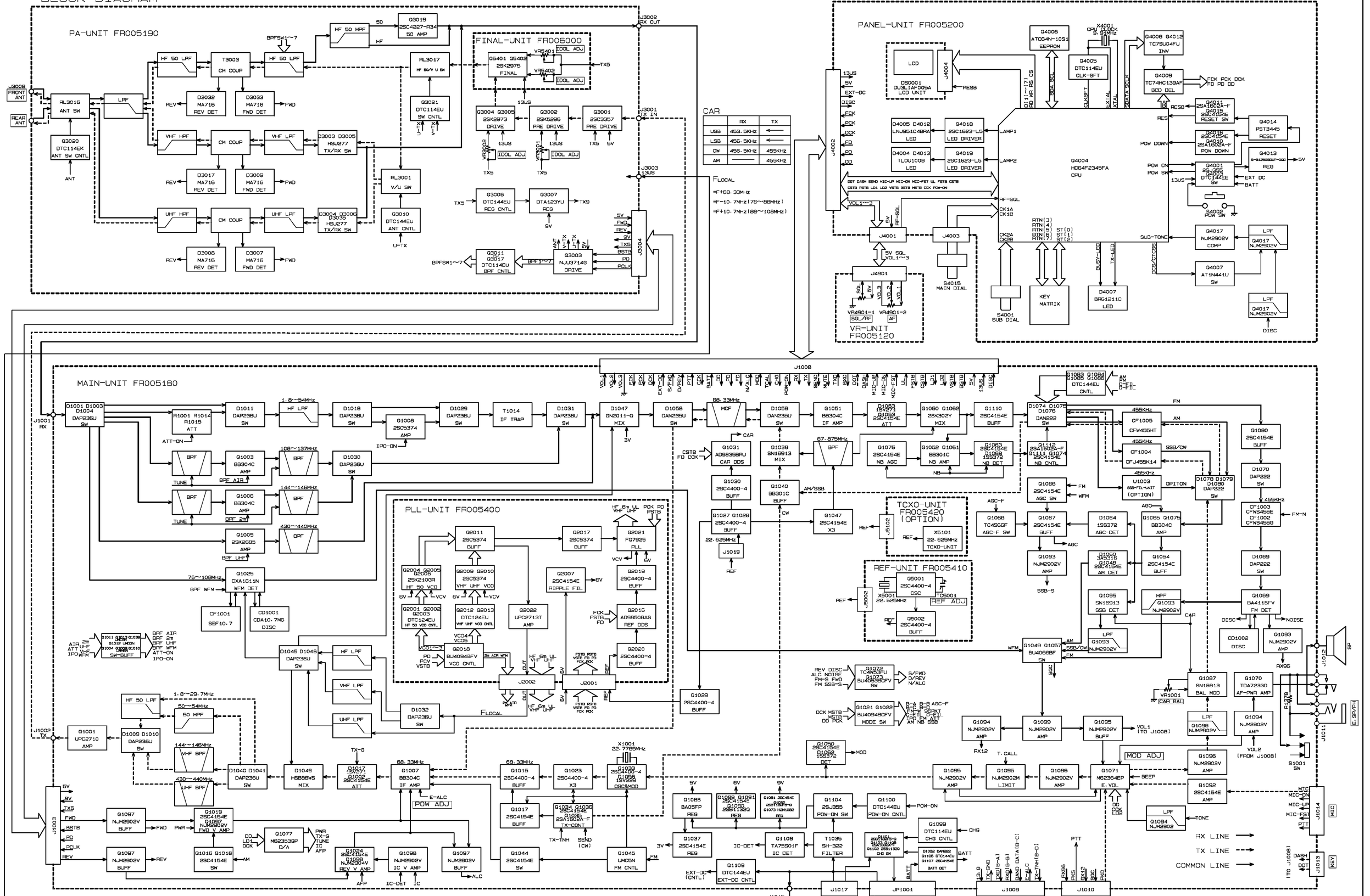
PA-UNIT FR005190
FINAL-UNIT FR005000
PANEL-UNIT FR005200
MAIN-UNIT FR005180
PLL-UNIT FR005400
VR-UNIT FR005120
TCXO-UNIT FR005420 (OPTION)
REF-UNIT FR005410
CAR
FLOCAL
J1008
J1003
J1002
J1001
J3004
J4002
J4001
J4003
J4901
J3002 RX OUT
J3001 TX IN
J3003 13US
J3008 FRONT ANT
REAR ANT
ANT
U-TX
RX LINE
TX LINE
COMMON LINE
CAT/LINEAR
PKT/DATA
MIC
KEY
SP
E.SPK
J1012
J1014
J1013
J1011
J1015 13US
J1017 EXT-DC 13.8V
JP1001 BATT 12V
J5102
J5002
J1019
X5101 22.625MHz TCXO-UNIT
X5001 22.625MHz
X1001 22.7685MHz
CF1001 SEF10.7
CD1001 CDA10.7MG DISC
CD1002 DISC
S4015 MAIN DIAL
S4001 SUB DIAL
S1001 SW
KEY MATRIX
D4007 BRG1211C LED
D4005 D4012 LNJ35104BRA LED
D4004 D4013 TLOU1009 LED
D9001 DU3L1AF005A LCD UNIT
LCD
G4004 HD64F2345FA CPU
G4006 AT093N-10S1 EEPROM
G4005 DTC114EU CLK-SFT
G4008 G4012 TC75U04FU INV
G4009 TC74HC139AF BCD DEL
G4011 2SA1602A-F
G4015 2SC4154E RESET SW
G4014 PST3445 RESET
G4016 2SC4154E
G4010 2SA1602A-F POW DOWN
G4013 S-81250GUF-00Z REG
G4001 2SJ355 G4003 DTC144EE SW
G4002 POW SW
G4017 NJM2902V COMP
G4007 AT1N441U SW
G4017 NJM2902V DISC
G4018 2SC1623-L5 LED DRIVER
G4019 2SC1623-L5 LED DRIVER
G3019 2SC4227-R34 50 AMP
G3020 DTC114EK ANT SW CNTL
RL3016 ANT SW
RL3017 HF 50/V U SW
RL3001 V/U SW
G3021 DTC114EU SW CNTL
G3010 DTC144EU ANT CNTL
G3011 G3017 DTC114EU BPF CNTL
G3003 NJU3714G DRIVE
G3006 DTC144EU REG CNTL
G3007 DTA123YU REG
G5401 G5402 2SK2975 FINAL
G3004 G3005 2SK2973 DRIVE
G3002 2SK5296 PRE DRIVE
G3001 2SC3357 PRE DRIVE
D3003 D3005 HSU277 TX/RX SW
D3004 D3006 HSU277 TX/RX SW
D3032 MA716 REV DET
D3033 MA716 FWD DET
D3017 MA716 REV DET
D3009 MA716 FWD DET
D3008 MA716 REV DET
D3007 MA716 FWD DET
G2011 2SC5374 BUFF
G2017 2SC5374 BUFF
G2021 F07925 PLL
G2004 G2005 2SK2109R HF 50 VCO
G2009 G2010 2SC5374 VHF UHF VCO
G2007 2SC4154E RIPPLE FIL
G2019 2SC4400-4 BUFF
G2001 G2002 G2003 DTC124EU HF 50 VCO CNTL
G2012 G2013 DTC124EU VHF UHF VCO CNTL
G2022 UPC2713T AMP
G2015 AD9850BAS REF DDS
G2018 BU40948FV VCO CNTL
G2020 2SC4400-4 BUFF
G5001 2SC4400-4 OSC
G5002 2SC4400-4 BUFF
REF ADJ
G1001 UPC2710 AMP
D1009 D1010 DAP236U SW
D1045 D1046 DAP236U SW
D1032 DAP236U SW
D1040 D1041 DAP236U SW
D1049 HSB88WS MIX
G1017 1SV271 D1062 2SC4154E ATT
G1007 BB304C IF AMP
G1015 2SC4400-4 BUFF
G1023 2SC4400-4 X3
D1033 2SC4400-4 D1056 1SV269 OSC&MOD
G1017 2SC4154E BUFF
G1034 G1036 2SC4154E D1051 2SA1502A-F TX-CONT
G1044 2SC4154E SW
G1045 LMC8N FM CNTL
G1097 NJM2902V BUFF
G1019 2SC4154E G1097 NJM2902V FWD V AMP
G1016 G1018 2SC4154E SW
G1077 M62353GP D/A
G1024 2SC4154E G1098 NJM2904V REV V AMP
G1096 NJM2902V IC V AMP
G1097 NJM2902V BUFF
G1088 BA05FP REG
G1089 G1091 2SC4154E G1090 2SB1132Q REG
G1081 2SC4154E G1082 2SB1132Q G1073 H2M1082 REG
G1104 2SJ355 POW-ON SW
G1100 DTC144EU POW-ON CNTL
G1037 2SC4154E REG
G1108 TA75S01F IC DET
T1035 SH-322 FILTER
G1101 2SC4154E G1099 2SC4154E G1102 2SB1132Q CHG SW
G1099 DTC114EU CHG CNTL
G1109 DTC144EU EXT-DC CNTL
D1088 D1089 D1106 DTC144EU G1107 2SC4154E BATT DET
G1071 M62364EP E.VOL
G1095 NJM2902V AMP
G1095 NJM2902M LIMIT
G1096 NJM2902V AMP
G1092 2SC4154E AMP
G1094 NJM2902
G1087 SN16913 BAL MOD
G1070 TDA7233D AF-PWR AMP
G1094 NJM2902V AMP
G1096 NJM2902V AMP
G1099 NJM2902V AMP
G1095 NJM2902V BUFF
G1094 NJM2902V AMP
G1093 NJM2902V
G1049 G1057 BU4066BF SW
G1072 TC4053BFU G1073 BU4053BCFV SW
G1021 G1022 BU4094BCFV MODE SW
G1080 2SC4154E BUFF
G1070 DAP222 SW
G1069 DAP222 SW
G1069 BA4115FV FM DET
G1093 NJM2902V AMP
G1055 SN16913 SSB DET
G1054 2SC4154E BUFF
G1065 G1075 BB304C AMP
G1067 2SC4154E BUFF
G1066 2SC4154E AGC SW
G1068 TC4066F AGC-F SW
G1064 1SS372 AGC-DET
G1093 NJM2902V AMP
G1052 G1061 BB301C NB AMP
G1053 1SS372 NB DET
G1076 2SC4154E NB AGC
G1050 G1062 2SK302Y MIX
G1110 2SC4154E BUFF
G1074 2SC4154E NB CNTL
G1112 2SA1602A-F
G1030 2SC4400-4 BUFF
G1027 G1028 2SC4400-4 BUFF
G1031 AD9835RU CAR DDS
G1039 SN16913 MIX
G1040 BB301C BUFF
G1047 2SC4154E X3
G1029 2SC4400-4 BUFF
G1051 BB304C IF AMP
G1059 DAN235U SW
D1058 DAN235U SW
MCF 68.33MHz
BPF 67.875MHz
D1047 GN2011-Q MIX
D1029 DAP236U SW
T1014 IF TRAP
D1031 DAP236U SW
D1028 DAP236U SW
G1008 2SC5374 AMP
D1018 DAP236U SW
D1011 DAP236U SW
HF LPF 1.8~54MHz
D1001 D1003 D1004 DAP236U SW
R1001 R1014 R1015 ATT
G1003 BB304C AMP
G1006 BB304C AMP
G1005 2SK2685 AMP
D1030 DAP236U SW
G1025 CXA1611N WFM DET
D1074 D1075 D1076 DAN222 SW
D1078 D1079 D1080 DAP222 SW
D1069 DAP222 SW
D1070 DAP222 SW
G1090 2SC4154E BUFF
CF1005 CFW455HT 455KHz
CF1004 CFJ455K14 455KHz
U1003 SSB-FTL-UNIT (OPTION) 455KHz
CF1003 CFW455E CF1002 CFW455G 455KHz
G1080 G1083 G1084 G1085 G1086 DTC144EU CNTL
AM FM-N FM-F
FM
AM
SSB/CW
OPTION
FM-N
AGC
AGC-F
AM/SSB
CW
CAR
CSTB FD PCK
REF
22.625MHz
ATT-ON
IPO-ON
TUNE
BPF AIR
BPF 2m
BPF UHF
BPF WFM
ATT UHF
ATT VHF
IPO WFM
ATT-CN
TX-G
E-ALC
POW ADJ
MOD ADJ
VOL1 (TO J1008)
VOL2 (FROM J1008)
CAR BAL
RX12
T.CALL
BEEP
TONE
POW-ON
CHG
BATT
PTT
EXT-DC (CNTL)
IC-DET
IC
ALC
APP
MOD
DISC
NOISE
RX96
SQC
SW-BUFF
VCO CNTL
REF DDS
FM DET
BAL MOD
AF-PWR AMP
AM DET
SSB DET
FM DET
LIMIT
E.VOL
POW-ON SW
POW-ON CNTL
CHG CNTL
EXT-DC CNTL
BATT DET
CHG SW
FM CNTL
FILTER
IC DET
REG
BUFF
AMP
SW
MIX
DDS
DET
MODE SW
AGC SW
NB AGC
NB AMP
NB DET
NB CNTL
AGC-DET
AM DET
SSB DET
FM DET
BAL MOD
AF-PWR AMP
E.VOL
LIMIT

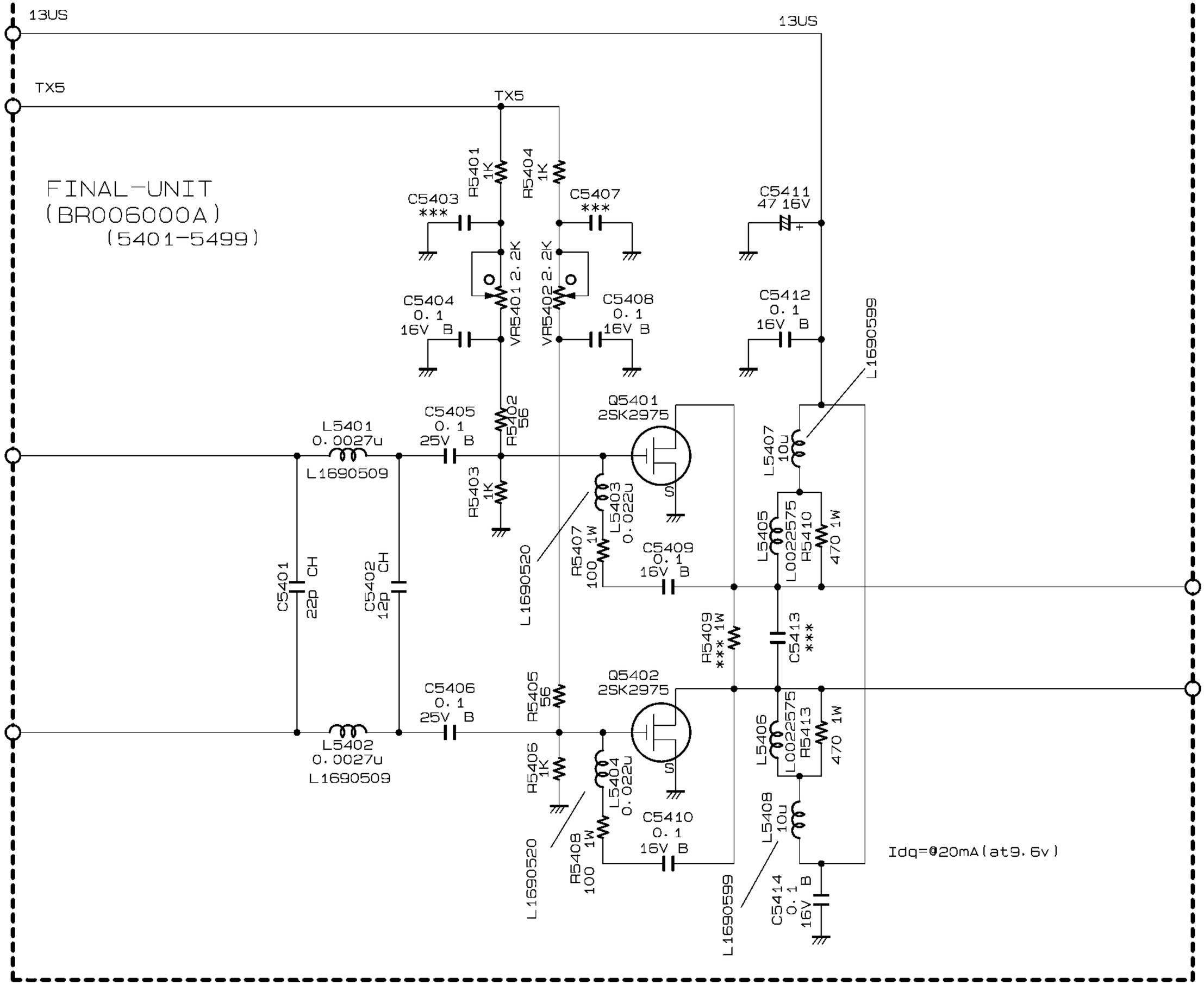

CIRCUIT DIAGRAM	MODEL FT-1377
DES. B-A13770000/FINAL-UNIT	
REF. BP008320D.cir 001.sht	EDITION
DATE DEC 03.,1999	UPDATE JUN 21.,2000
YAESU MUSEN CO.,LTD	

yaesu1 1900.08.01 10:17

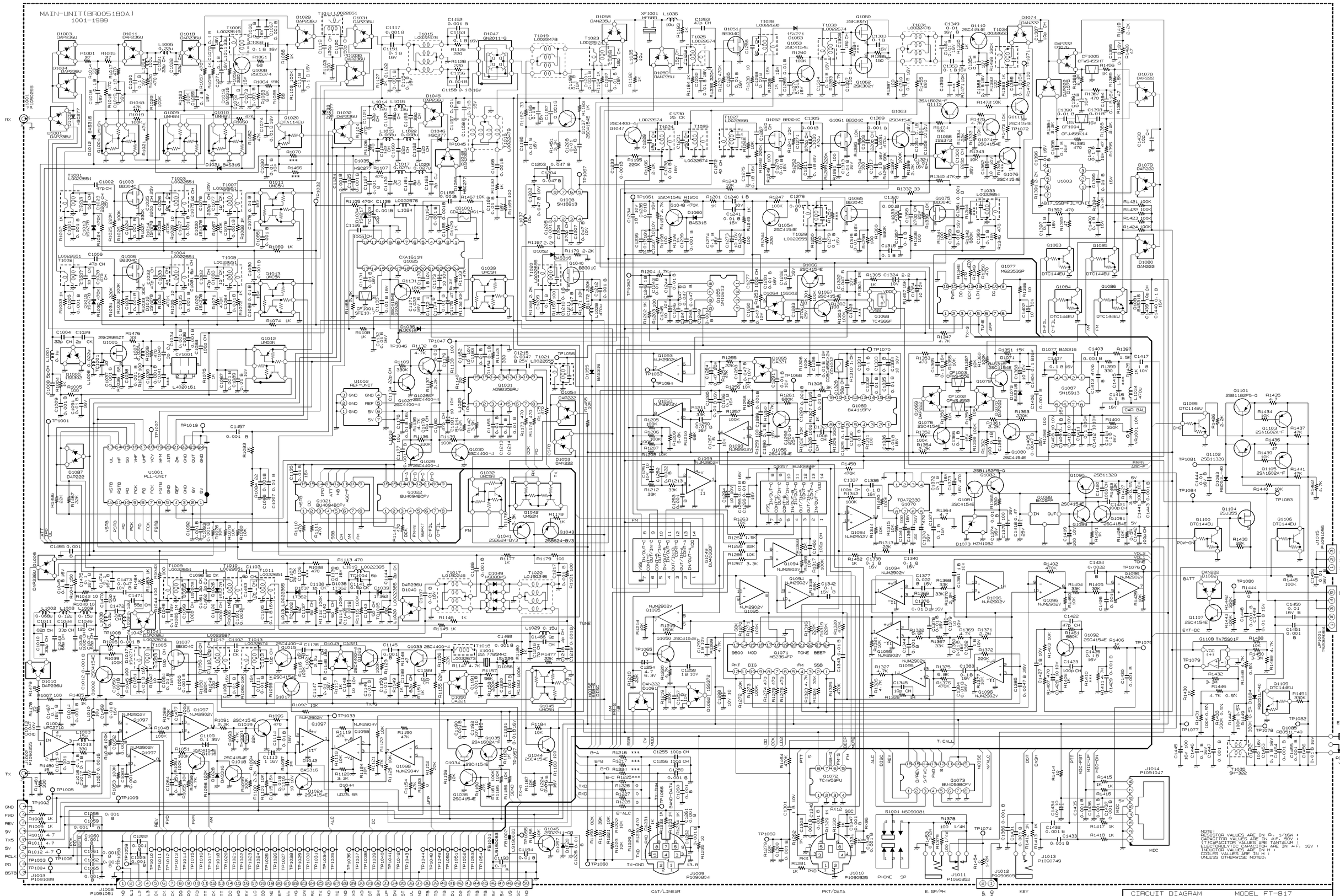

CIRCUIT DIAGRAM MODEL FT-817
DES. B-A13770000/MAIN-UNIT
REF. BP006960D.cir/001.sht EDITION 1026
DATE 08 Sep.·1999 UPDATE 19 JUL.·2000
YAESU MUSEN CO.·LTD
yaesu1 2000.08.10 12:56

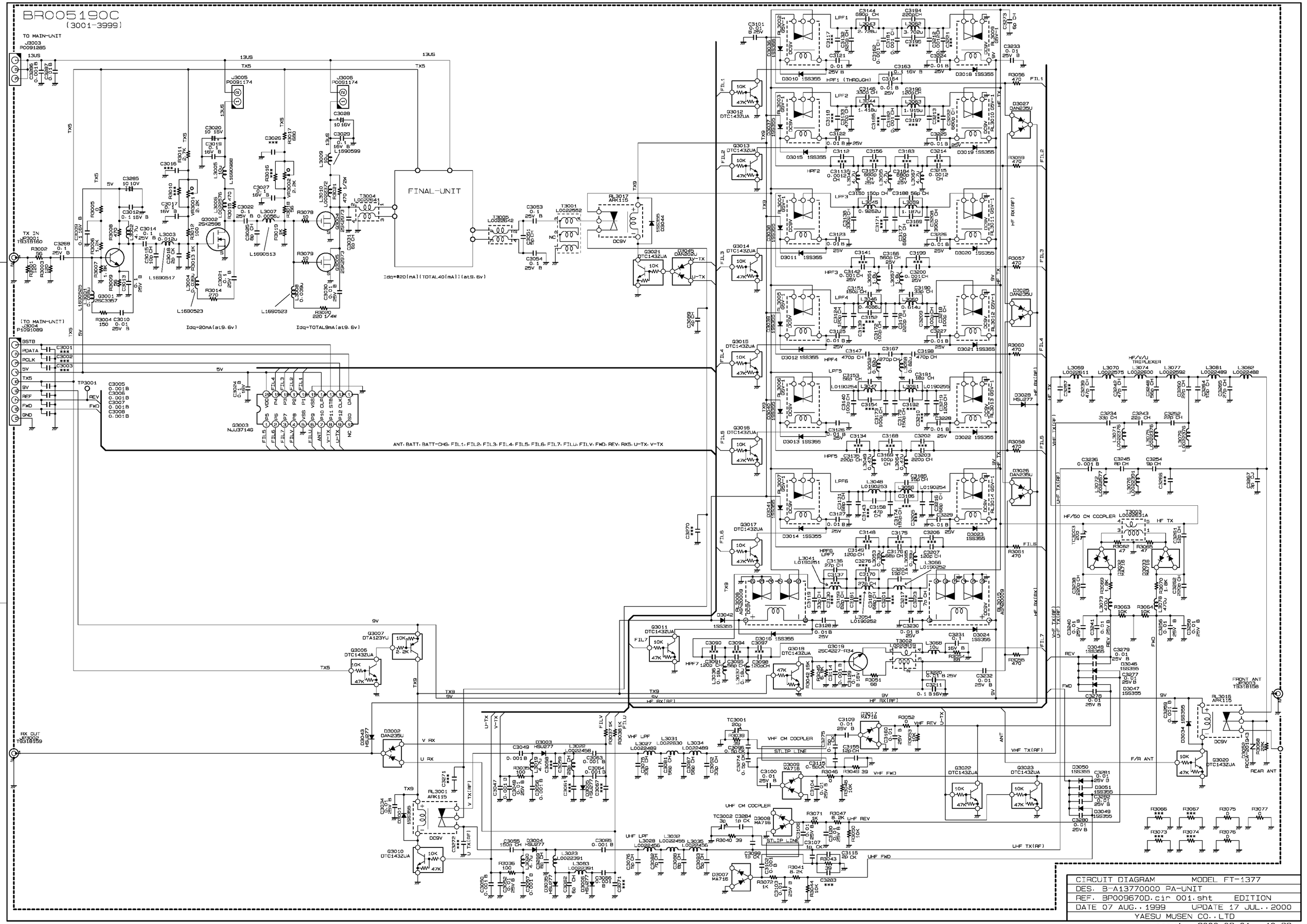

CIRCUIT DIAGRAM	MODEL FT-1377
DES. B-A13770000 PA-UNIT	
REF. BP009670D.cir 001.sht	EDITION
DATE 07 AUG.'1999	UPDATE 17 JUL.'2000
YAESU MUSEN CO.,LTD	

yaesu1 2000.08.01 10:38

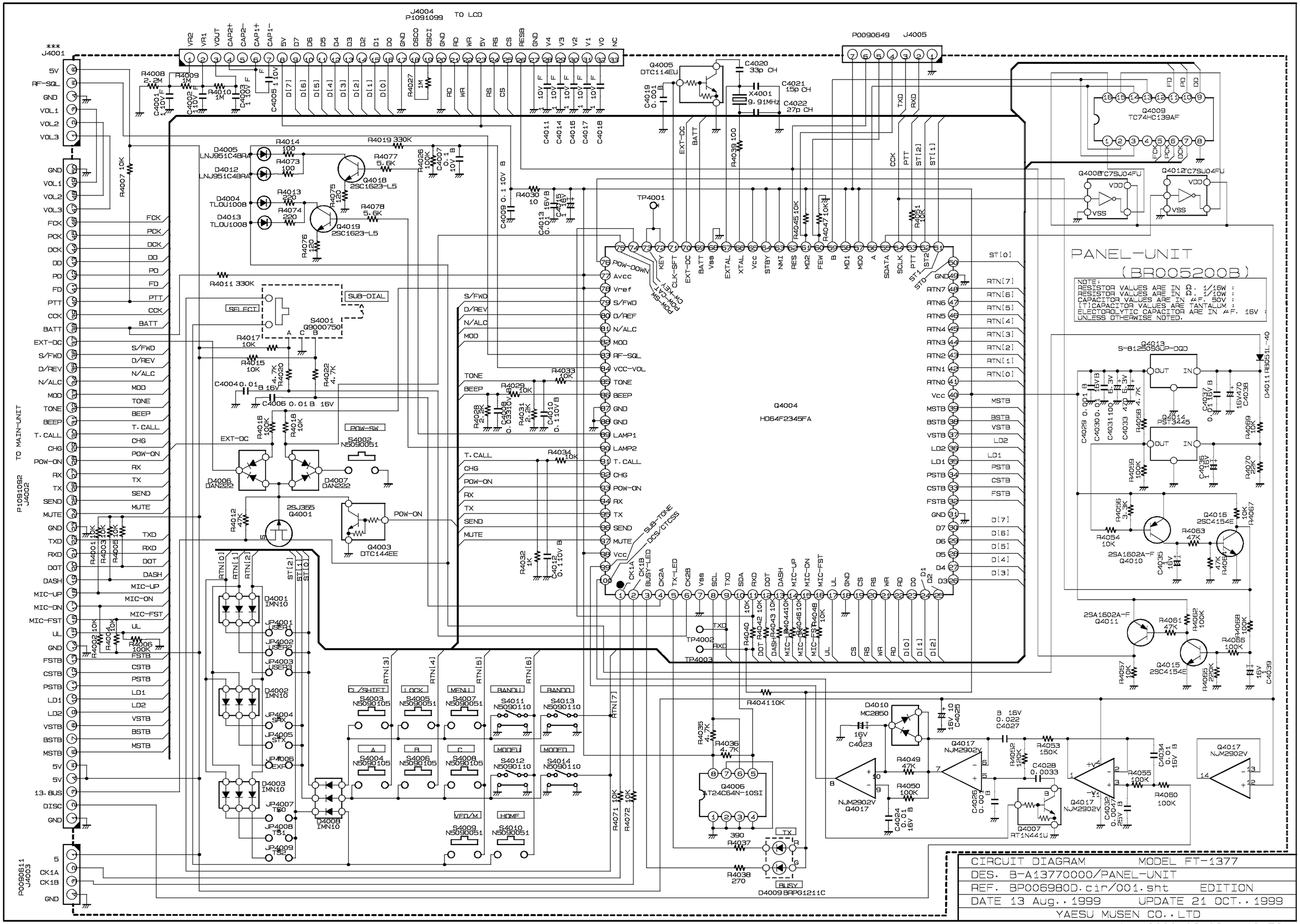
J4004 P1091099 TO LCD
P0090649 J4005
J4001
TO MAIN-UNIT P1091092 J4002
P0090611 J4003
Q4004 HD64F2345FA
Q4009 TC74HC139AF
Q4008 TC7SU04FU
Q4012 TC7SU04FU
Q4005 DTC114EU
X4001 9.91MHz
TP4001
TP4002
TP4003
PANEL-UNIT
(BR005200B)
NOTE:
RESISTOR VALUES ARE IN Ω. 1/16W :
RESISTOR VALUES ARE IN Ω. 1/10W
CAPACITOR VALUES ARE IN μF. 50V :
(T)CAPACITOR VALUES ARE TANTALUM :
ELECTROLYTIC CAPACITOR ARE IN μF. 16V :
UNLESS OTHERWISE NOTED.
Q4013 S-81250SGUP-DQD
Q4016 2SC4154E
Q4010 2SA1602A-F
Q4011 2SA1602A-F
Q4015 2SC4154E
Q4018 2SC1623-L5
Q4019 2SC1623-L5
Q4003 DTC144EE
Q4006 AT24C64N-10SI
Q4017 NJM2902V
Q4007 RT1N441U
D4010 MC2850
D4009 BRPG1211C
D4011 RB051L-40
SUB-DIAL
SELECT
POW-SW
S4001 G9000750
S4002 N5090051
S4003 N5090105
S4004 N5090105
S4005 N5090051
S4006 N5090105
S4007 N5090051
S4008 N5090105
S4009 N5090051
S4010 N5090051
S4011 N5090110
S4012 N5090110
S4013 N5090110
S4014 N5090110
CIRCUIT DIAGRAM MODEL FT-1377
DES. B-A13770000/PANEL-UNIT
REF. BP006980D.cir/001.sht EDITION
DATE 13 Aug.・1999 UPDATE 21 OCT.・1999
YAESU MUSEN CO.・LTD
yaesu1 2000.08.09 12:52

005400C(Lot.001用回路図)

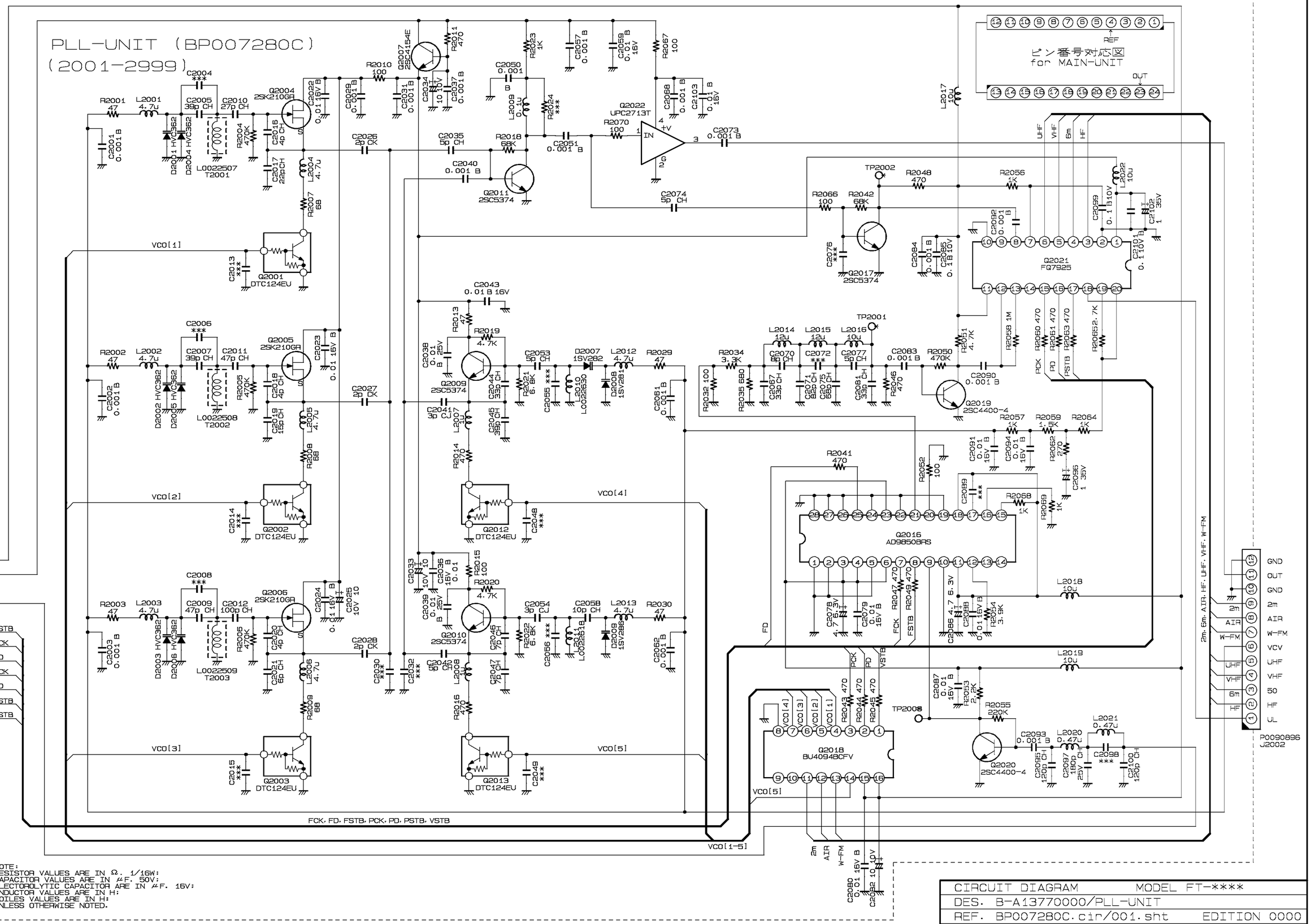

NOTE:
RESISTOR VALUES ARE IN Ω. 1/16W:
CAPACITOR VALUES ARE IN μF. 50V:
ELECTOROLYTIC CAPACITOR ARE IN μF. 16V:
INDUCTOR VALUES ARE IN H:
COILES VALUES ARE IN H:
UNLESS OTHERWISE NOTED.

CIRCUIT DIAGRAM	MODEL FT-****
DES. B-A13770000/PLL-UNIT	
REF. BP007280C.cir/001.sht	EDITION 0000
DATE 07 Oct.,1999	UPDATE 16 Jun .2000
YAESU MUSEN CO.,LTD	

yaesu1 2000.07.17 15:56

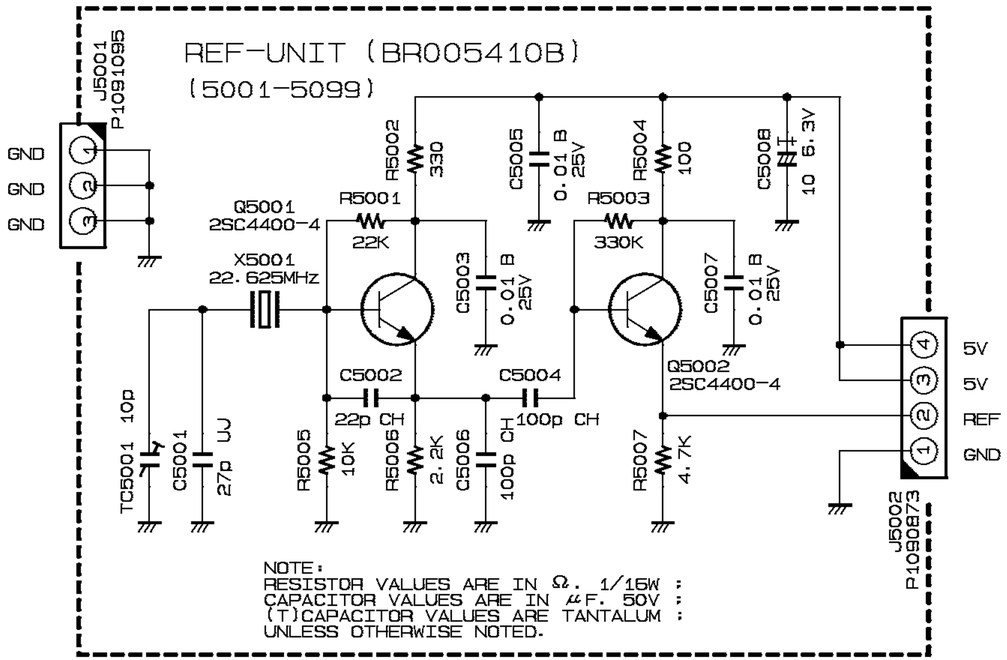

CIRCUIT DIAGRAM	MODEL	
DES. B-A13770000/REF-UNIT		
REF. BP007290B.cir/001.sht		EDITION 0000
DATE 29 OCT., 1999	UPDATE 03 JUN., 2000	
YAESU MUSEN CO., LTD		

yaesu1 2000.06.05 13:57

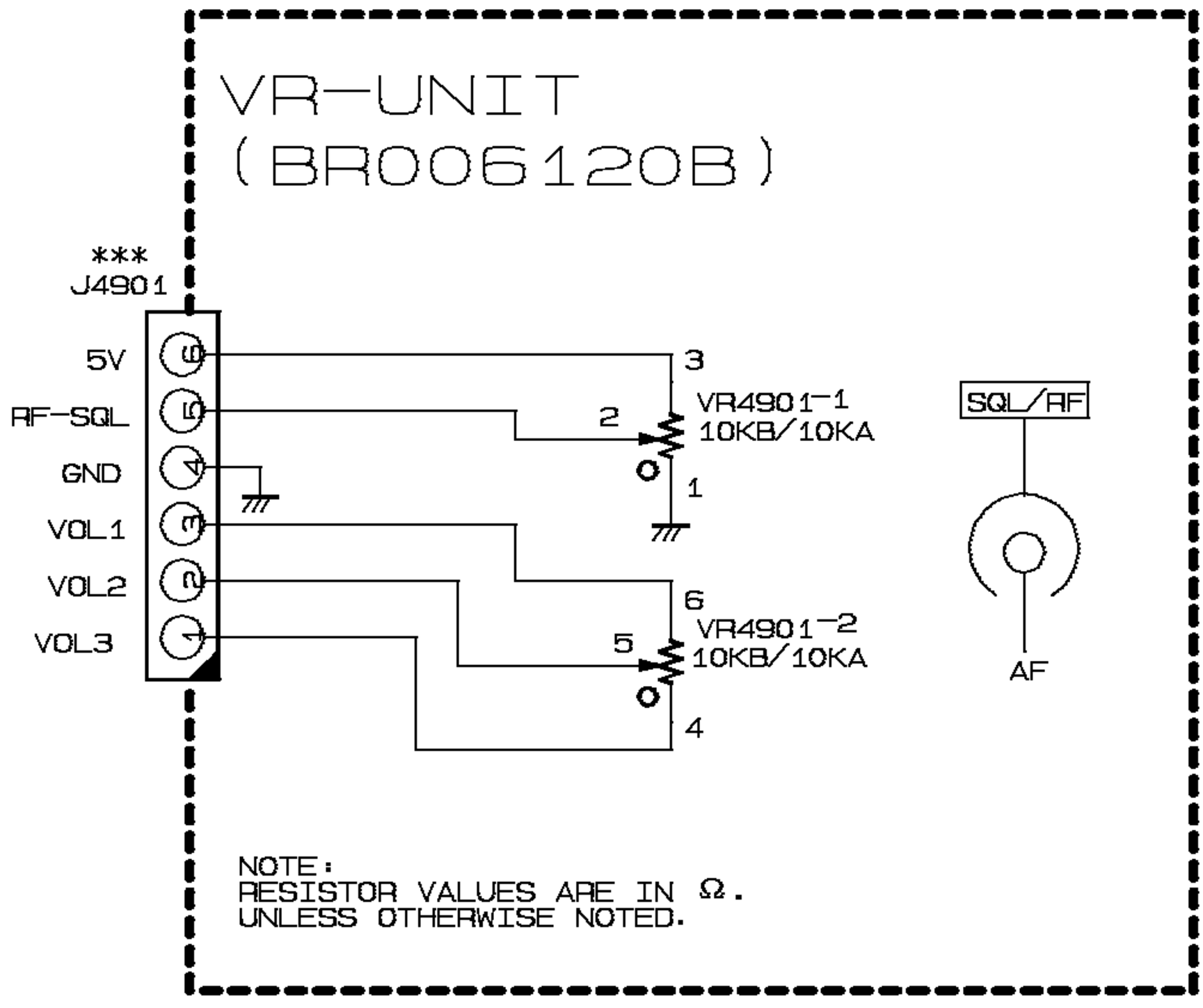

CIRCUIT DIAGRAM	MODEL
DES. B-A13770000/VR-UNIT	
REF. BP008380B.cir/001.sht	EDITION 0000
DATE 01 FEB.,2000	UPDATE 01 FEB.,2000
YAESU MUSEN CO.,LTD	

yaesu1 2000.08.09 12:53